PRODUCT DATA SHEET - CLICK

bouncepad®

Mounting:	Packaged weight:	Colour:
Freestanding	0.96kg	White Black
Fixing from **Below**		
Fixing from **Above**		

Dimensions

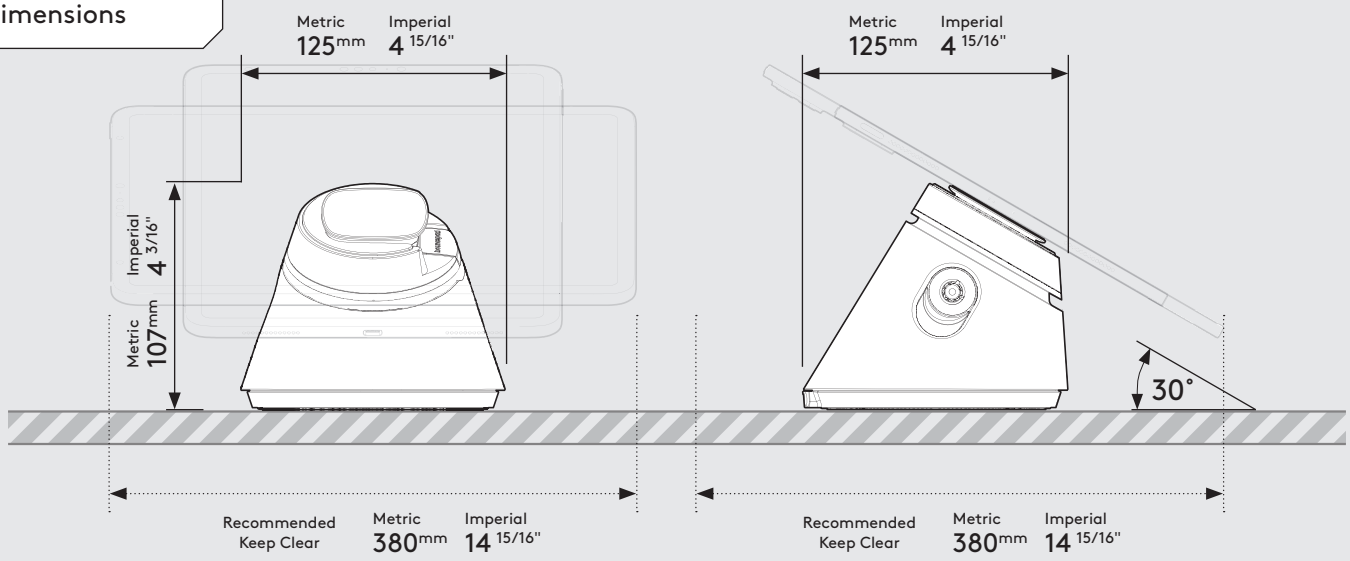

Mounting Options

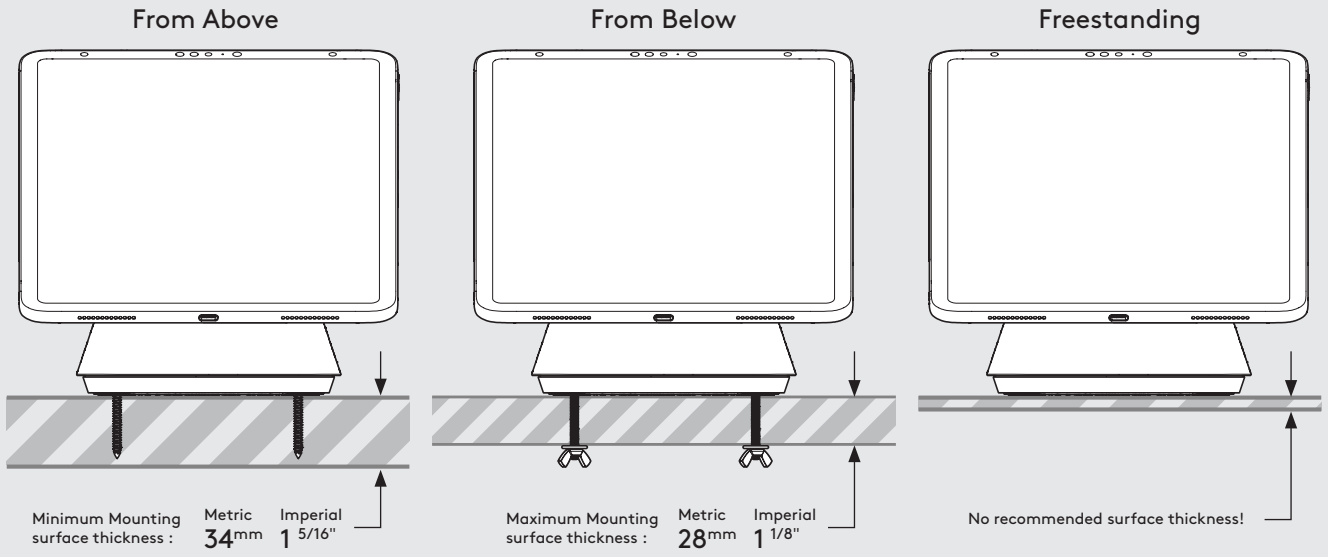

In the Box

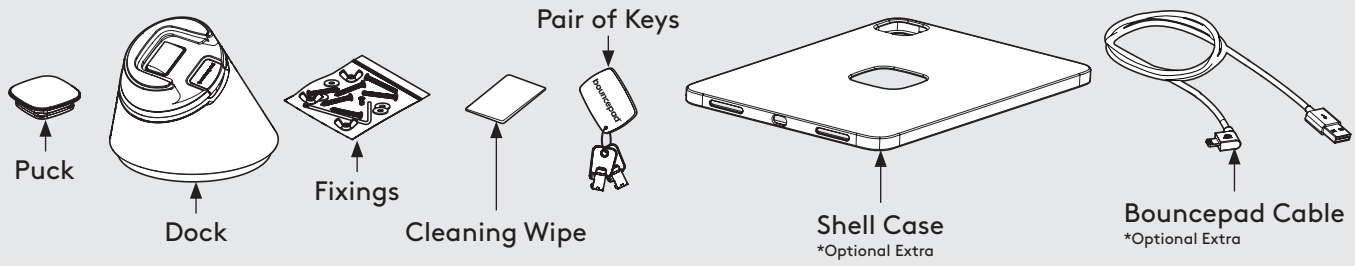

Sheet Code: BP-DAT-CLI_REV2
Release Date: 10/01/2022

Copyright 2016 Spotspot Ltd. (T/A Bouncepad) all rights reserved.
Confidential, no part of this publication may be reproduced or transmitted in any form without the written permission of the copyright holder.